KROSS STUDIO

KS 05 COLLECTION

USER MANUAL

TABLE OF CONTENTS

KS 05 CENTRAL FLOATING TOURBILLON

Overview 3

Movement winding 5

Time setting 6

Interchangeable straps 7

Buckle opening 8

Buckle release 8

GENERAL

Regular care 9

Tech specs 10

KS 05 CENTRAL FLOATING TOURBILLON

FRONT

1 Case

2 Dial

3 Hour hand

4 Minute hand

5 Floating tourbillon cage

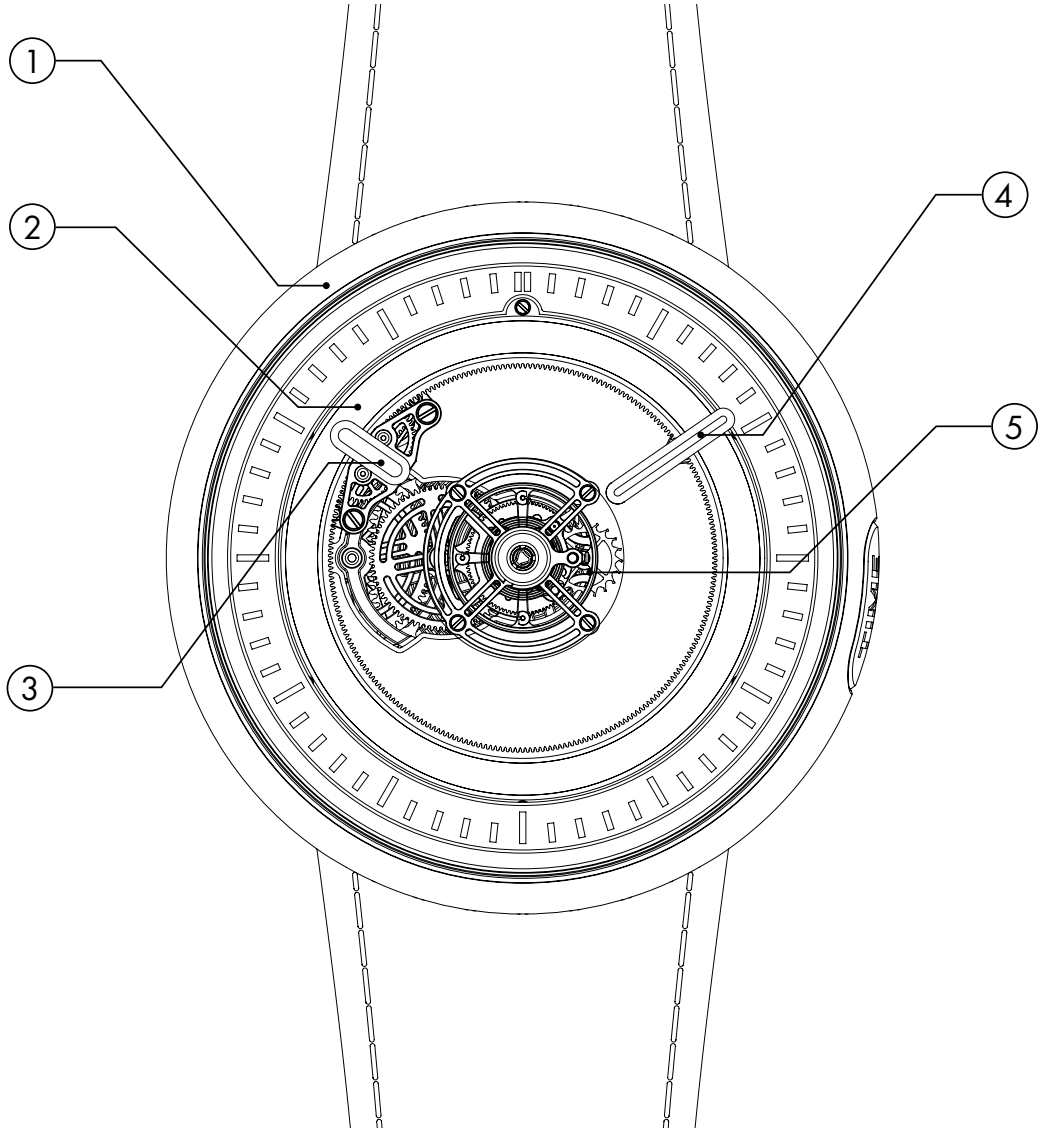

KS 05 CENTRAL FLOATING TOURBILLON

BACK

6 Time set push button

7 D-ring crown

8 Strap release push buttons
"Push to release"

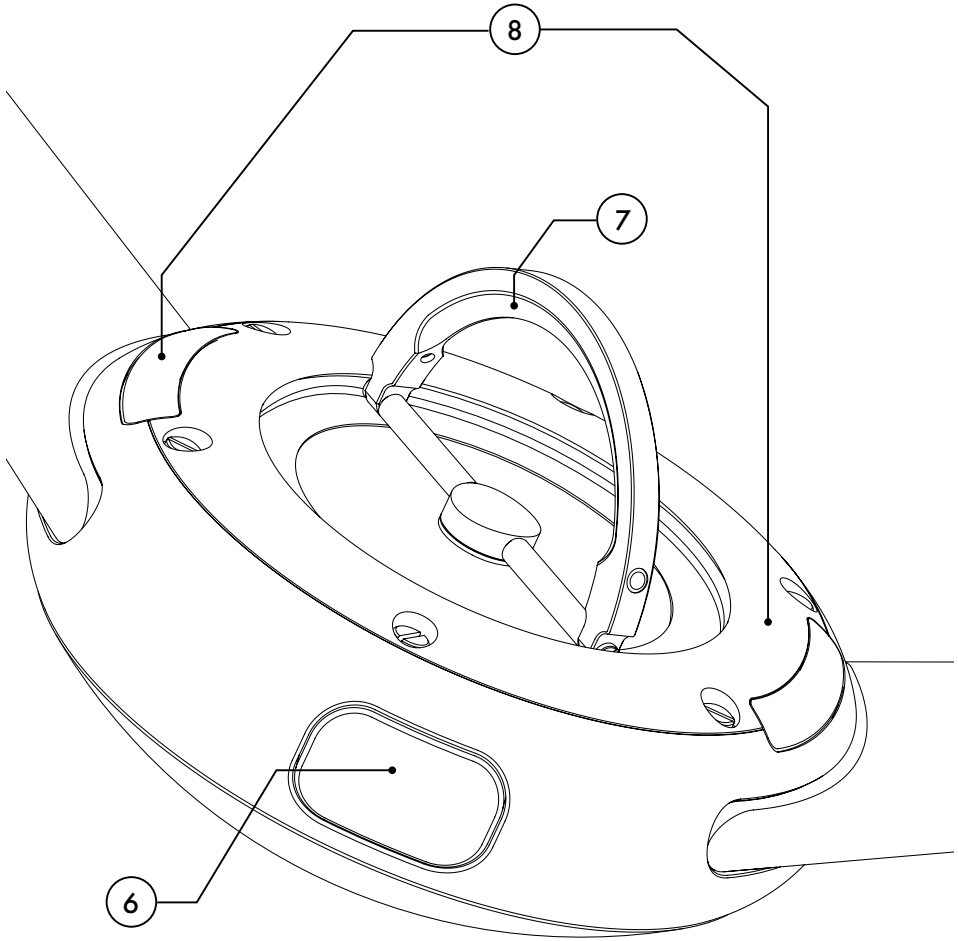

MOVEMENT WINDING

The manual-winding mechanical movement developed in-house delivers a 5-day power reserve. After this period, you must wind your watch to provide the necessary energy for it to run.

In order to maintain perfect symmetry, the KS 05 Central Floating Tourbillon case has no traditional crown. On the case back, a D-ring crown is stowed out of sight to help maintain the timepiece's sleek, space-age styling. This mechanism enables faster winding than with a traditional crown.

To wind your watch, lift the D-ring crown and turn it counterclockwise until you feel some resistance, meaning that the watch has been wound. To fully wind your watch, 23 complete turns are needed.

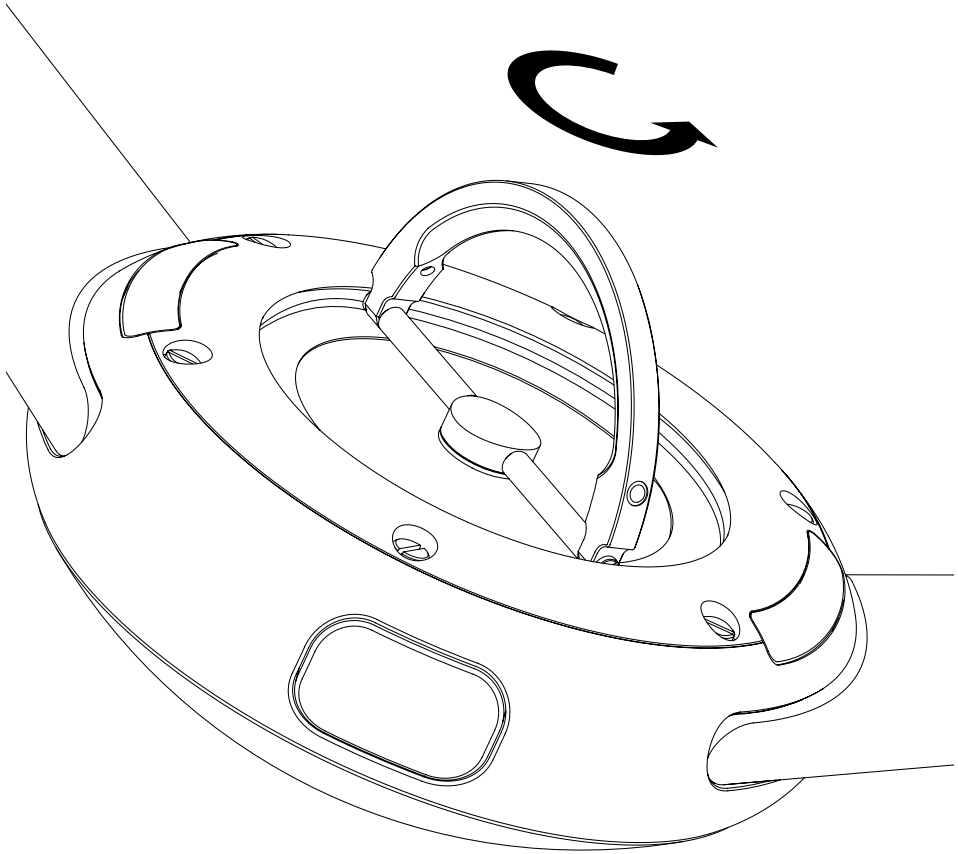

TIME SETTING

The hours and minutes are displayed in a unique peripheral format, made possible by a planetary gear system that orbits 360° around the tourbillon.

To set the time, press the "Time Set" push button. Lift the D-ring crown - located on the case-back - synchronously and turn clockwise until the exact time is set. When setting the time, there may be some resistance as the watch will be wound simultaneously.

Note:
You might turn the D-crown counterclockwise. In this case, go back 10 minutes before the actual time. Then, turn it clockwise until adjusting the exact time. It enables the gear train to go back to its functioning position.

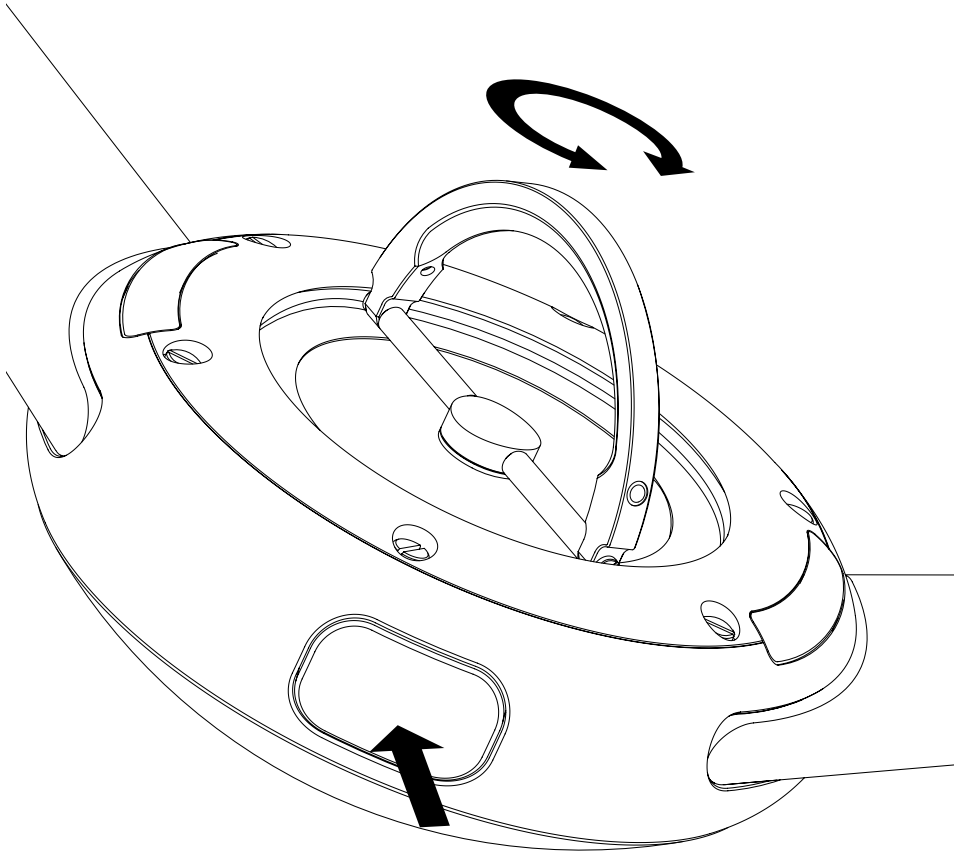

INTERCHANGEABLE STRAPS

The KS 05 Central Floating Tourbillon is equipped with an interchangeable strap system, a practical feature where two quick-release buttons are hidden on the underside of the case.

Push each button to release the strap.

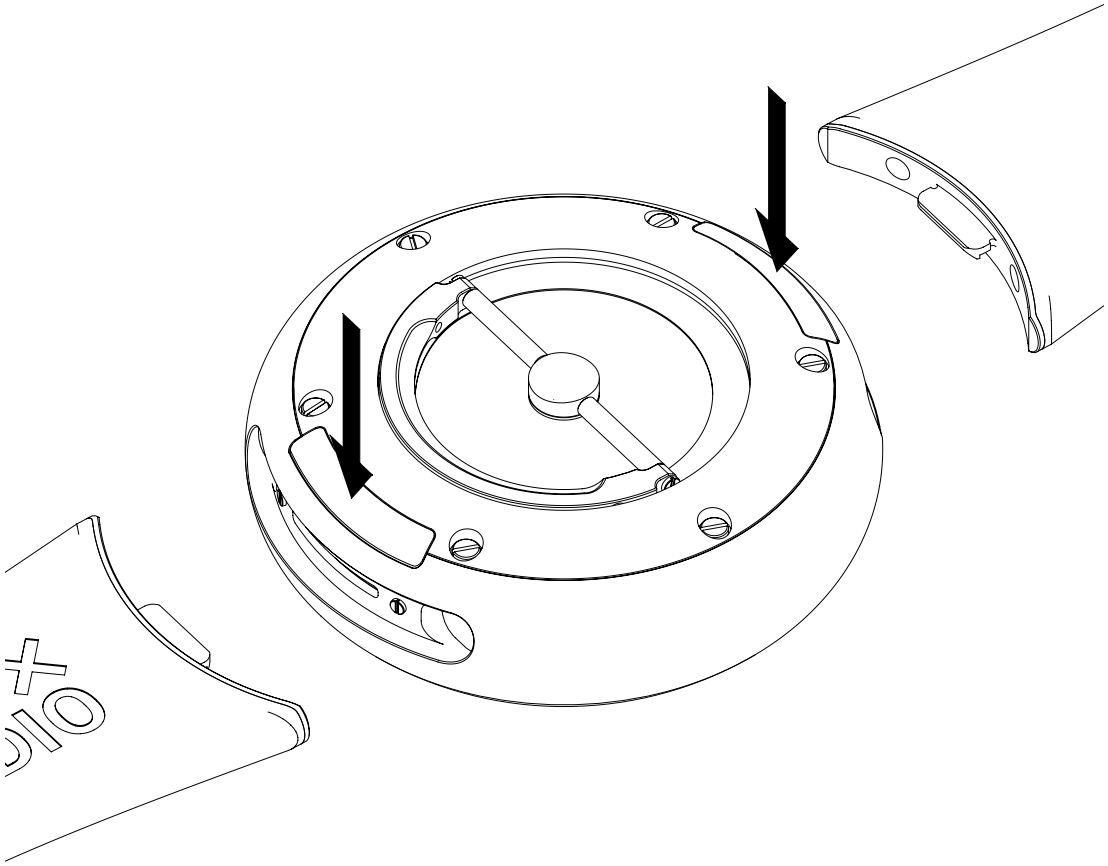

BUCKLE OPENING

Press simultaneously the two push buttons located on the sides of the clasp to open the buckle.

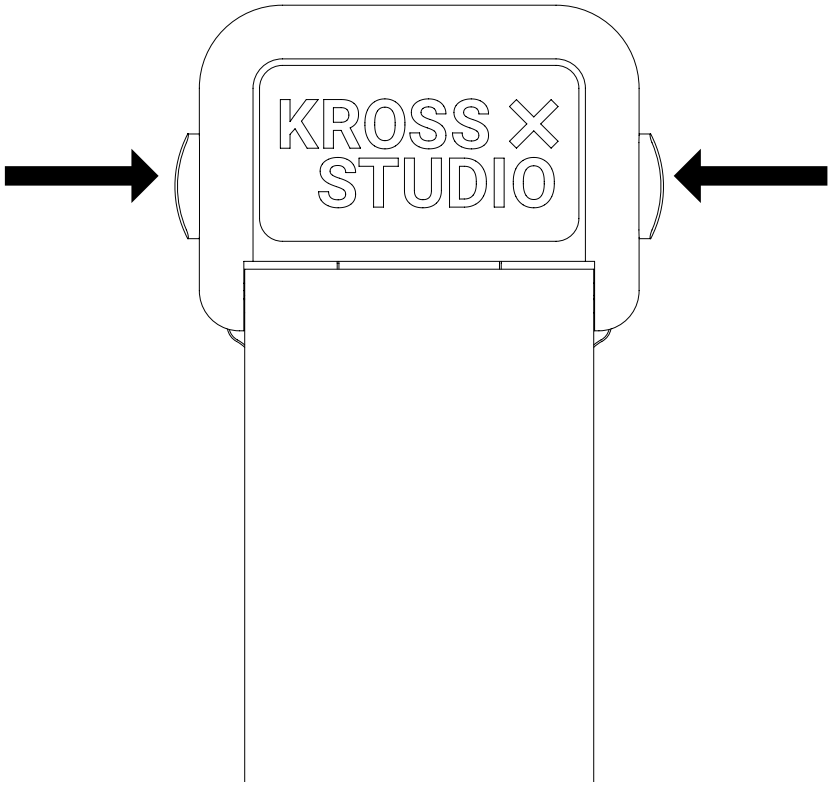

BUCKLE RELEASE

To detach the buckle, no tools are required. Simply pull the lever located under the clasp and it will release the strap.

To fix the buckle, start by inserting the right side of the buckle on the spring bar. Pull the lever and insert the left side.

Make sure the spring bar is securely in place by pulling few times the strap.

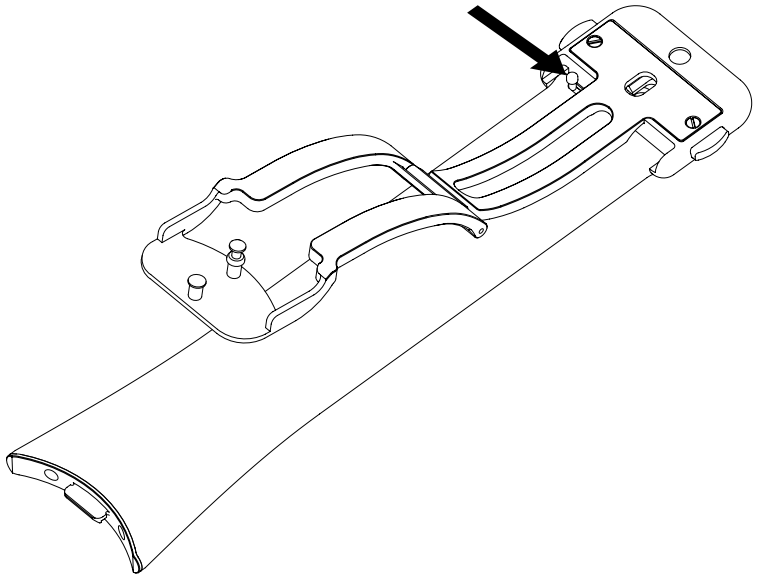

REGULAR CARE

REGULAR CARE OF THE KS 05 CENTRAL FLOATING TOURBILLON

The tourbillon remains one of the main horological complications and bears the mark of the most talented watchmakers. Caution and care are required to ensure the longevity of your watch. To handle it properly, a set of gloves and a soft microfiber cloth are provided in a box along with your KS 05 Central Floating Tourbillon. We strongly recommend wearing gloves every time the watch is manipulated for winding or time setting. It will enable a better gripping and help prevent any risk of scratching.

The watch has a water resistance of 30 meters. We recommend avoiding sea water. Clean regularly your watch by wiping down carefully with the soft microfiber cloth. If needed, you may use a solvent-free cleaner to spray on the cloth. Do not spray any liquid directly on the watch.

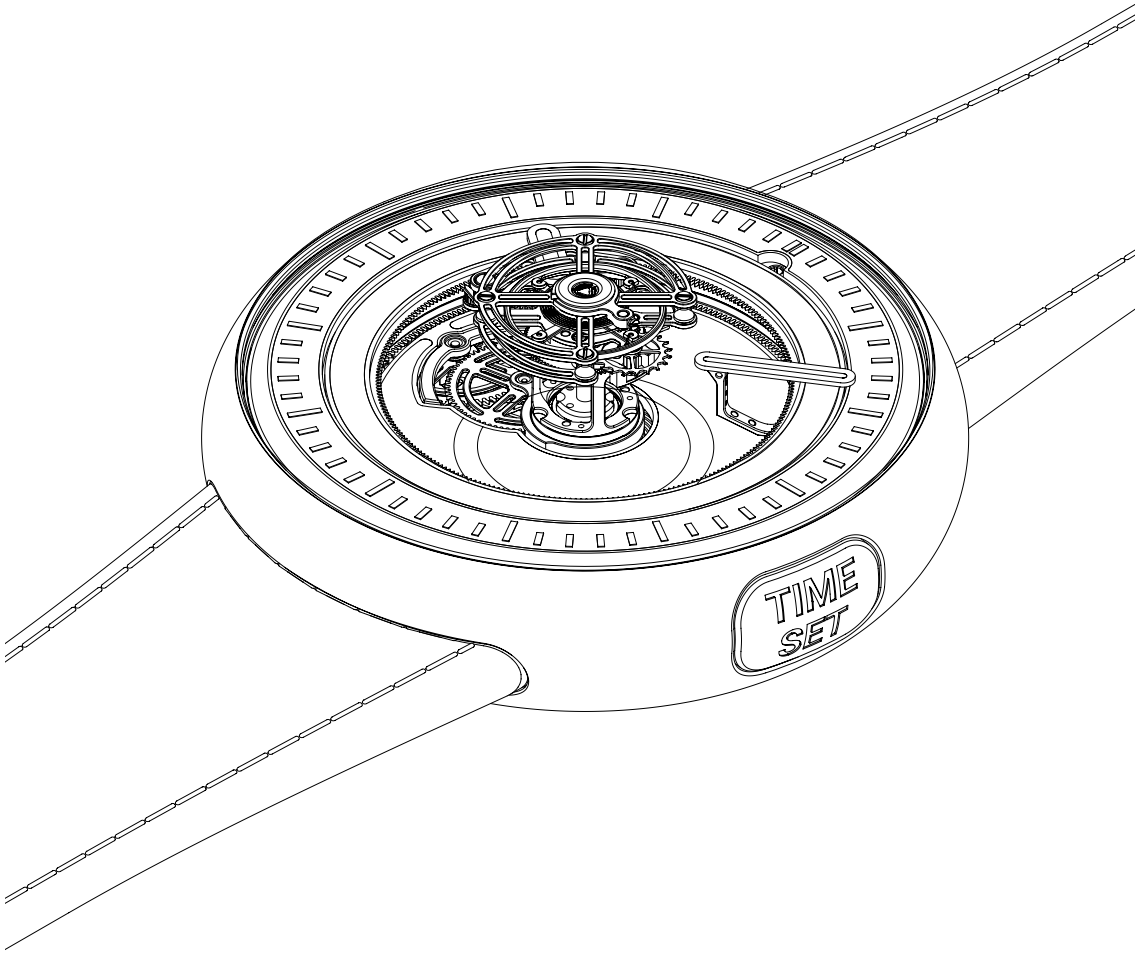

TECH SPECS

KS 05 CENTRAL FLOATING TOURBILLON

Parts
298

Limited edition
Each model is limited to 10 pieces

Movement

Caliber
KS 7'005

Functions
Manual-winding patented floating central tourbillon

Parts
220

Jewels
27

Power reserve
5 days

Frequency
21'600bph / 3Hz

Case

Materials
Grade 5 titanium or 18 karat pink gold
Dome-shaped anti-reflective sapphire crystal

Diamond Case
281 pavé-set D-F VVS1 diamonds, approximately 5.09 carats

Water resistance
30m or 3ATM

Diameter
45mm

Thickness
20mm

Thickness without crystal
12.5mm

Case back

Material
Engraved grade 5 titanium or 18 karat pink gold

Interchangeable straps

Each timepiece comes with two customized set of straps.

The deployant buckle clasp is in grade 5 titanium or 18 karat pink gold.